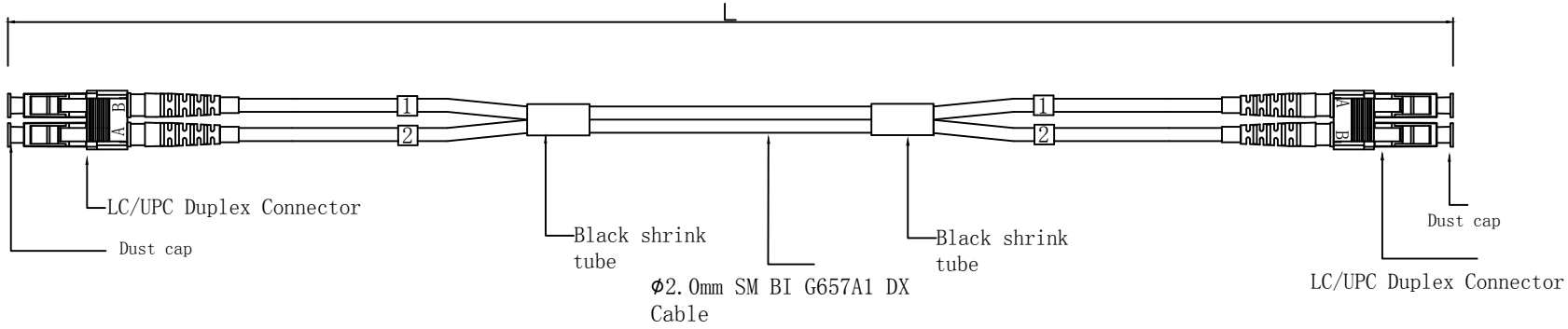

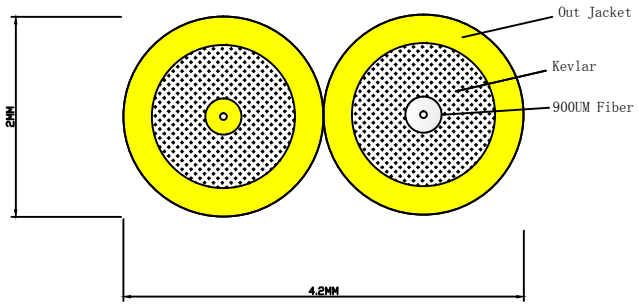

Construction			
NO	Item	Main cable	Material
1	Cable	Φ2.0mm SM BI G657A1 DX Cable	LSZH Coating
2			

Features		
NO	Item	SM(LC)
1	Instrtion loss(I.L.)	≤0.30dB
2	Ruturn loss(R.L.)	≧55dB
3	Repeatability	≤0.1dB
4	Temperature	-20℃~+70℃
5	Durability	≤1000 times
6	Min.Bend Radius (Fiber Core)	10mm
7	Min.Bend Radius (Fiber Cable)	10/5D(Dynamic/Static)

Mechnical features		
NO	Item	
1	Pull force	≤10KG

size unit	general tolerance
1 ~ 4	±0.05
4 ~ 16	±0.07
16 ~ 63	±0.1
63 ~ 250	±0.2
▽	35Z-50Z
▽▽	6.3Z-18Z
▽▽▽	0.8Z-6.3Z

design		
drawing		
verify		
final verify		

Model NO
LC/UPC-LC/UPC SM9/125 BI G657A1 2mm DX XXL

surface treatment		material		proportion	NSL
				Size unit	mm